iQ parts

IQ-PARTS-SHOP.COM

SPECS & INFORMATION

DIN 3567

Form A

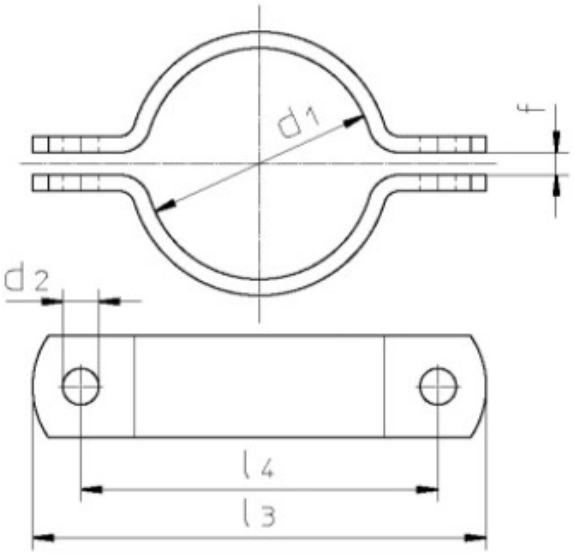

d_1	Nennweite DN	Zoll	l_3	l_4	d_2	f	Material-stärke	Zubehör: Sechskant-schrauben	100 Paar ~ kg
20	15		87	57	11,5	7	30 x 5	M10 x 30	19
22	15	1/2 "	89	59					20
25	20		92	62					21
27	20	3/4 "	96	66					22
30	25		98	68					23
34	25	1 "	102	72					24
38	32		106	76					26
43	32	1 1/4 "	112	82					27
45	40		114	84					28
49	40	1 1/2 "	118	88					30
57	50		140	104	14	9	40 x 6	M12 x 35	54
61	50	2 "	144	108					55
77	65	2 1/2 "	158	122					60
89	80	3 "	172	136					70
108	100		220	172	18	11	50 x 8	M16 x 45	140
115	100	4 "	226	178					145
133	125		244	196					168
140	125	5 "	252	204					180
159	150		270	222					200
169	150	6 "	280	232					205
194	175	7 "	306	258					240
216	200		328	280					255
220	200	8 "	332	284					260
267	250		402	342	23	14	60 x 8	M20 x 50	360
273	250	10 "	408	348					390
318	300		452	392					435
324	300	12 "	458	398					445
356	350	14 "	492	432					508
368	350		504	444					52
407	400	16 "	570	498	27	18	70 x 10	M24 x 60	840
419			582	510					860
458	450	18 "	620	548					910
508	500	20 "	672	600					1010
521	500		686	614					1020
610	600	24 "	782	710					1300
711	700	28 "	884	812					1500
813	800	32 "	985	913			80 x 12	M24 x 80	2230

iQ parts
IQ-PARTS-SHOP.COM

info@iq-parts.nl
Harsweg 34A
2461 EZ Ter Aar
T +31 252 624 126
The Netherlands